SURFACE MOUNT GLASS PASSIVATED SILICION RECTIFIER (FLAT PACK)

TYPE	PIV (Peak Inverse Voltage)	MAX AVG Rectified Current @ Half Wave Res. Load 60Hz		MAX FWD Peak Surge Current ~60 Hz Superimposed	MAX Reverse Current @PIV Voltage @25℃ T_A	MAX Forward Voltage @25 ℃ T_A	
	V_{PK}	I_O @ T_A		I_{FM} (Surge)	I_R	I_{FM}	V_{FM}
		A_{AV}	℃	A_{PK}	μ Adc	A_{PK}	V_{PK}

1.0 AMPERER /SM-10

ES1A	50	1.0	50	30	5.0	1.0	1.1
ES1B	100	1.0	50	30	5.0	1.0	1.1
ES1D	200	1.0	50	30	5.0	1.0	1.1
ES1G	400	1.0	50	30	5.0	1.0	1.1
ES1J	600	1.0	50	30	5.0	1.0	1.1
ES1K	800	1.0	50	30	5.0	1.0	1.1
ES1M	1000	1.0	50	30	5.0	1.0	1.1

Datasheet.Company

2.0 AMPERES /SM-10

ES2A	50	2.0	50	70	5.0	2.0	1.1
ES2B	100	2.0	50	70	5.0	2.0	1.1
ES2D	200	2.0	50	70	5.0	2.0	1.1
ES2G	400	2.0	50	70	5.0	2.0	1.1
ES2J	600	2.0	50	70	5.0	2.0	1.1
ES2K	800	2.0	50	70	5.0	2.0	1.1
ES2M	1000	2.0	50	70	5.0	2.0	1.1

3.0 AMPERES/SM-30

ES3A	50	3.0	50	200	5.0	3.0	1.2
ES3B	100	3.0	50	200	5.0	3.0	1.2
ES3D	200	3.0	50	200	5.0	3.0	1.2
ES3G	400	3.0	50	200	5.0	3.0	1.2
ES3J	600	3.0	50	200	5.0	3.0	1.2
ES3K	800	3.0	50	200	5.0	3.0	1.2
ES3M	1000	3.0	50	200	5.0	3.0	1.2

3095716 0000382 098

This Material Copyrighted By Its Respective Manufacturer

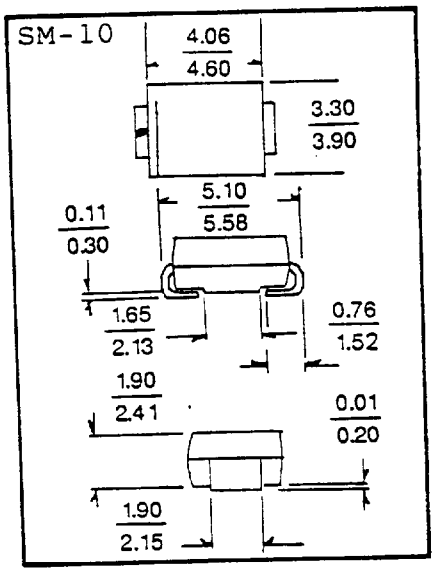

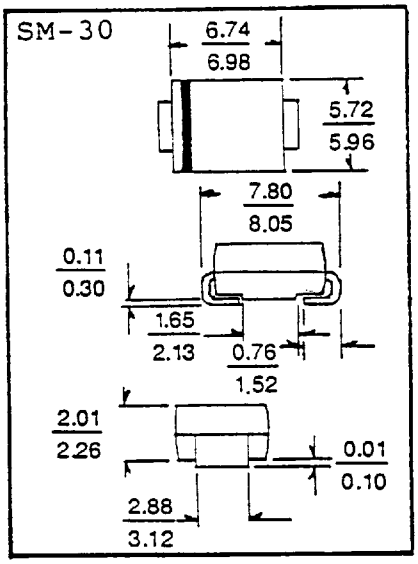

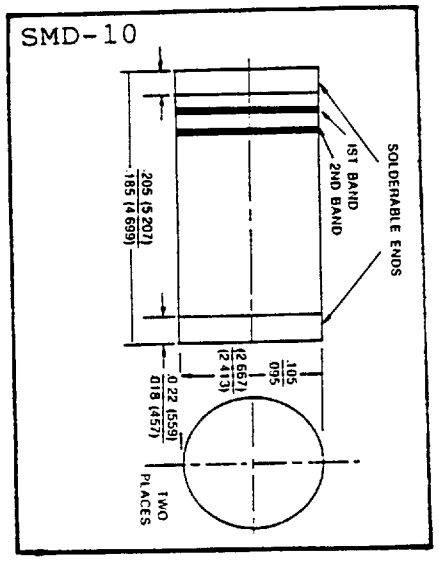

This Material Copyrighted By Its Respective Manufacturer