DUAL D-TYPE POSITIVE-EDGE-TRIGGERED FLIP-FLOPS WITH PRESET AND CLEAR

SDLS119 – DECEMBER 1983 – REVISED MARCH 1988

- **Package Options Include Plastic "Small Outline" Packages, Ceramic Chip Carriers and Flat Packages, and Plastic and Ceramic DIPs**
- **Dependable Texas Instruments Quality and Reliability**

description

These devices contain two independent D-type positive-edge-triggered flip-flops. A low level at the preset or clear inputs sets or resets the outputs regardless of the levels of the other inputs. When preset and clear are inactive (high), data at the D input meeting the setup time requirements are transferred to the outputs on the positive-going edge of the clock pulse. Clock triggering occurs at a voltage level and is not directly related to the rise time of the clock pulse. Following the hold time interval, data at the D input may be changed without affecting the levels at the outputs.

The SN54′ family is characterized for operation over the full military temperature range of −55°C to 125°C. The SN74′ family is characterized for operation from 0°C to 70°C.

Datasheet.Company

FUNCTION TABLE

INPUTS				OUTPUTS	
$\overline{PRE}$	$\overline{CLR}$	CLK	D	Q	$\overline{Q}$
L	H	X	X	H	L
H	L	X	X	L	H
L	L	X	X	H†	H†
H	H	↑	H	H	L
H	H	↑	L	L	H
H	H	L	X	Q_0	$\overline{Q}_0$

† The output levels in this configuration are not guaranteed to meet the minimum levels in V_{OH} if the lows at preset and clear are near V_{IL} maximum. Furthermore, this configuration is nonstable; that is, it will not persist when either preset or clear returns to its inactive (high) level.

SN5474 . . . J PACKAGE
SN54LS74A, SN54S74 . . . J OR W PACKAGE
SN7474 . . . N PACKAGE
SN74LS74A, SN74S74 . . . D OR N PACKAGE
(TOP VIEW)

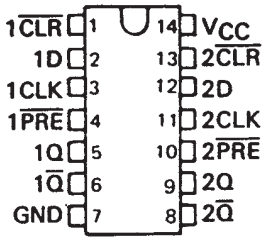

SN5474 . . . W PACKAGE
(TOP VIEW)

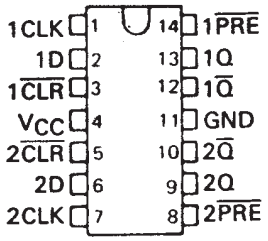

SN54LS74A, SN54S74 . . . FK PACKAGE
(TOP VIEW)

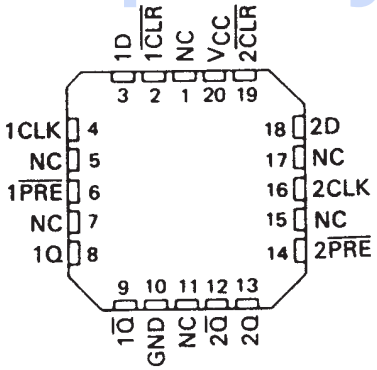

NC - No internal connection

logic symbol‡

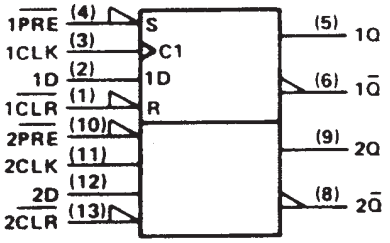

‡This symbol is in accordance with ANSI/IEEE Std 91-1984 and IEC Publication 617-12.
Pin numbers shown are for D, J, N, and W packages.

logic diagram (positive logic)

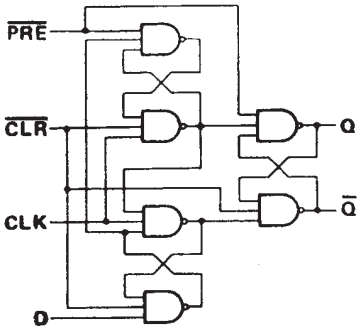

PRODUCTION DATA information is current as of publication date. Products conform to specifications per the terms of Texas Instruments standard warranty. Production processing does not necessarily include testing of all parameters.

Copyright © 1988, Texas Instruments Incorporated

schematics of inputs and outputs

'74

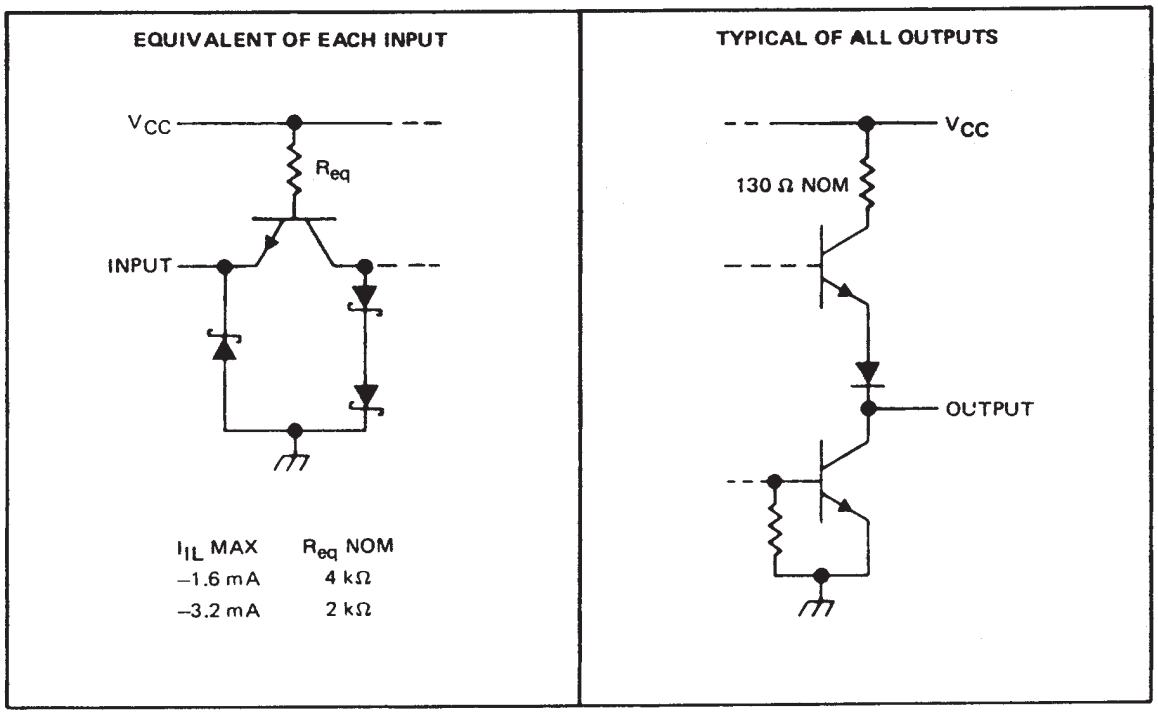

I_{IL} MAX	R_{eq} NOM
–1.6 mA	4 kΩ
–3.2 mA	2 kΩ

'S74

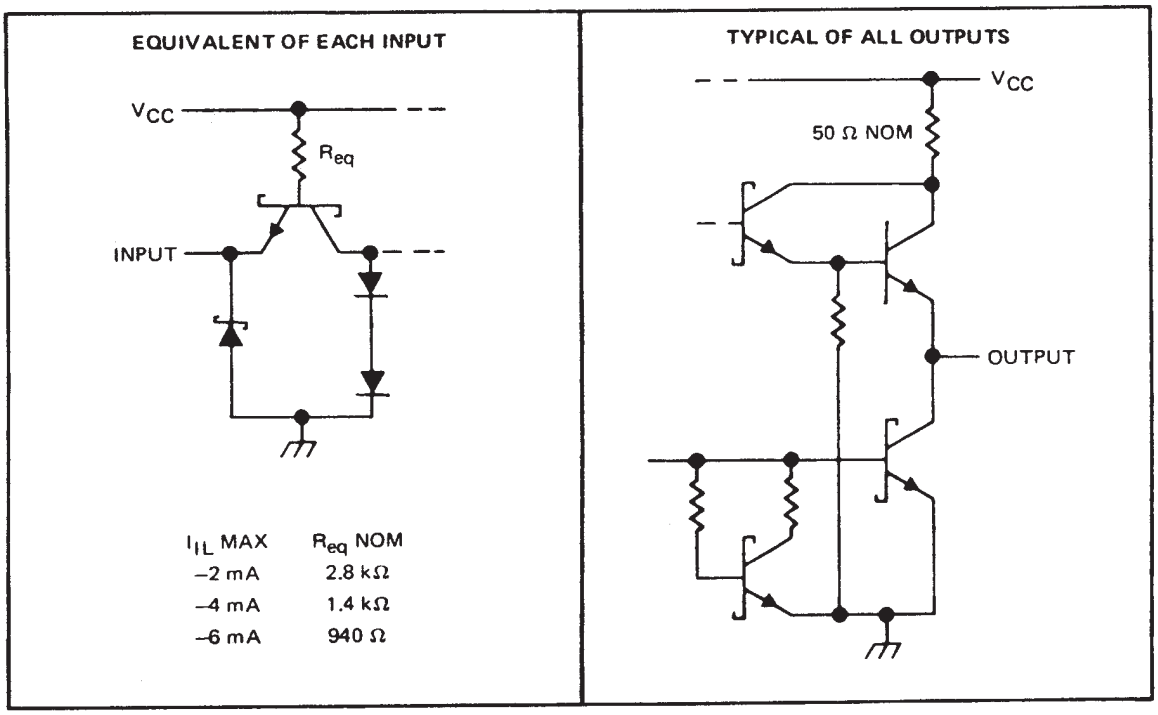

I_{IL} MAX	R_{eq} NOM
–2 mA	2.8 kΩ
–4 mA	1.4 kΩ
–6 mA	940 Ω

schematic

'LS74A

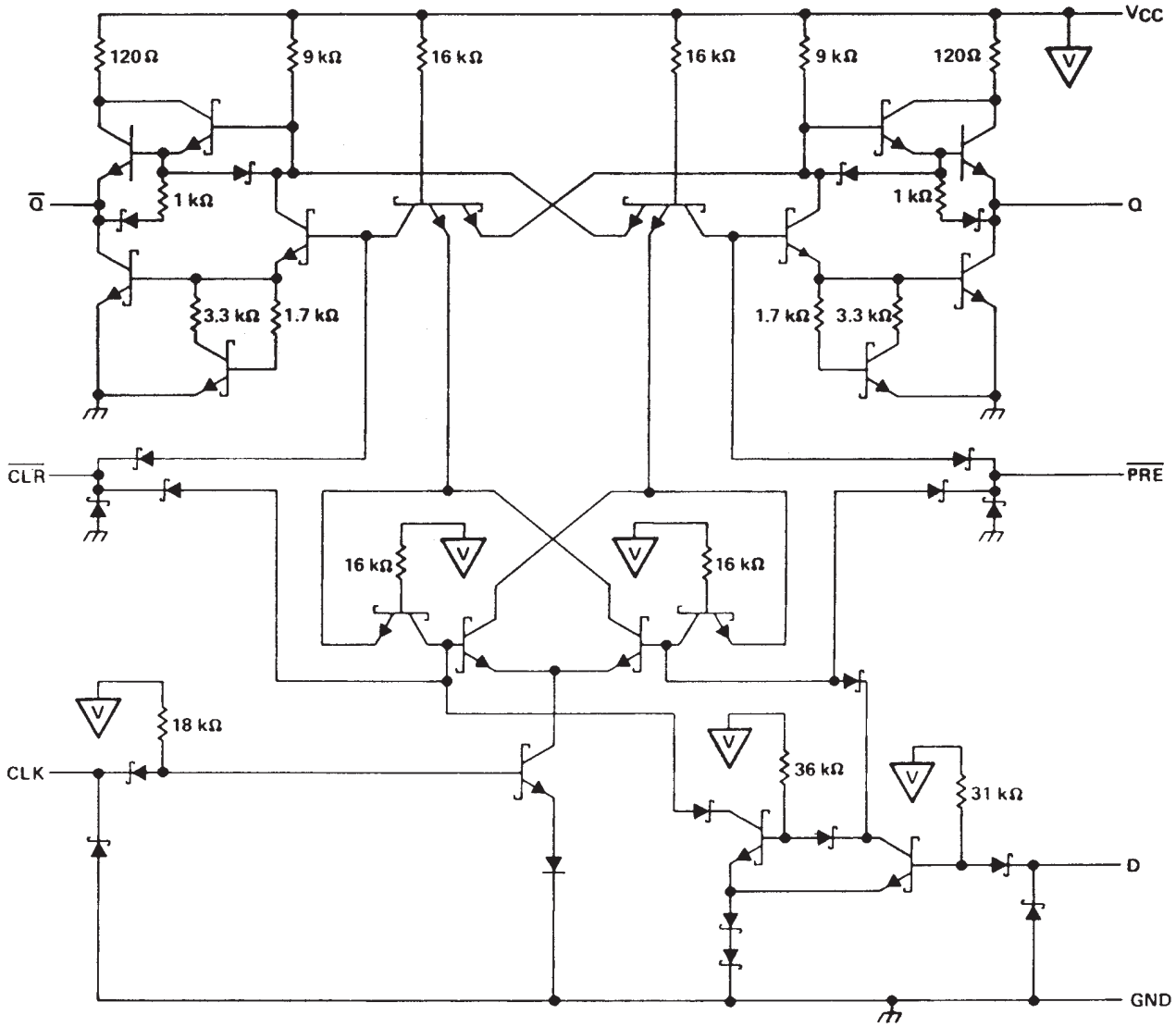

absolute maximum ratings over operating free-air temperature range (unless otherwise noted)

Supply voltage, V_{CC} (see Note 1) . . . . . 7 V
Input voltage: '74, 'S74 . . . . . 5.5 V
'LS74A . . . . . 7 V
Operating free-air temperature range: SN54' . . . . . −55°C to 125°C
SN74' . . . . . 0°C to 70°C
Storage temperature range . . . . . −65°C to 150°C

NOTE 1: Voltage values are with respect to network ground terminal.

recommended operating conditions

			SN5474			SN7474			UNIT
			MIN	NOM	MAX	MIN	NOM	MAX	
V_{CC}	Supply voltage		4.5	5	5.5	4.75	5	5.25	V
V_{IH}	High-level input voltage		2			2			V
V_{IL}	Low-level input voltage				0.8			0.8	V
I_{OH}	High-level output current				– 0.4			– 0.4	mA
I_{OL}	Low-level output current				16			16	mA
t_w	Pulse duration	CLK high	30			30			ns
		CLK low	37			37			
		$\overline{PRE}$ or $\overline{CLR}$ low	30			30			
t_{su}	Input setup time before CLK ↑		20			20			ns
t_h	Input hold time-data after CLK ↑		5			5			ns
T_A	Operating free-air temperature		– 55		125	0		70	°C

electrical characteristics over recommended operating free-air temperature range (unless otherwise noted)

PARAMETER		TEST CONDITIONS†	SN5474			SN7474			UNIT
			MIN	TYP‡	MAX	MIN	TYP‡	MAX	
V_{IK}		V_{CC} = MIN, I_I = – 12 mA			– 1.5			– 1.5	V
V_{OH}		V_{CC} = MIN, V_{IH} = 2 V, V_{IL} = 0.8 V, I_{OH} = – 0.4 mA	2.4	3.4		2.4	3.4		V
V_{OL}		V_{CC} = MIN, V_{IH} = 2 V, V_{IL} = 0.8 V, I_{OL} = 16 mA		0.2	0.4		0.2	0.4	V
I_I		V_{CC} = MAX, V_I = 5.5 V			1			1	mA
I_{IH}	D	V_{CC} = MAX, V_I = 2.4 V			40			40	μA
	$\overline{CLR}$				120			120	
	All Other				80			80	
I_{IL}	D	V_{CC} = MAX, V_I = 0.4 V			– 1.6			– 1.6	mA
	$\overline{PRE}$§				– 1.6			– 1.6	
	$\overline{CLR}$§				– 3.2			– 3.2	
	CLK				– 3.2			– 3.2	
I_{OS}¶		V_{CC} = MAX	– 20		– 57	– 18		– 57	mA
I_{CC}#		V_{CC} = MAX, See Note 2		8.5	15		8.5	15	mA

†For conditions shown as MIN or MAX, use the appropriate value specified under recommended operating conditions.
‡All typical values are at V_{CC} = 5 V, T_A = 25°C.
§Clear is tested with preset high and preset is tested with clear high.
¶Not more than one output should be shown at a time.
#Average per flip-flop.
NOTE 2: With all outputs open, I_{CC} is measured with the Q and $\overline{Q}$ outputs high in turn. At the time of measurement, the clock input is grounded.

switching charateristics, V_{CC} = 5 V, T_A = 25°C (see note 3)

PARAMETER	FROM (INPUT)	TO (OUTPUT)	TEST CONDITIONS	MIN	TYP	MAX	UNIT
f_{max}			R_L = 400 Ω, C_L = 15 pF	15	25		MHz
t_{PLH}	$\overline{PRE}$ or $\overline{CLR}$	Q or $\overline{Q}$				25	ns
t_{PHL}						40	ns
t_{PLH}	CLK	Q or $\overline{Q}$			14	25	ns
t_{PHL}					20	40	ns

NOTE 3: Load circuits and voltage waveforms are shown in Section 1.

recommended operating conditions

			SN54LS74A			SN74LS74A			UNIT
			MIN	NOM	MAX	MIN	NOM	MAX	
V_{CC}	Supply voltage		4.5	5	5.5	4.75	5	5.25	V
V_{IH}	High-level input voltage		2			2			V
V_{IL}	Low-level input voltage				0.7			0.8	V
I_{OH}	High-level output current				– 0.4			– 0.4	mA
I_{OL}	Low-level output current				4			8	mA
f_{clock}	Clock frequency		0		25	0		25	MHz
t_w	Pulse duration	CLK high	25			25			ns
		$\overline{PRE}$ or $\overline{CLR}$ low	25			25			
t_{su}	Setup time-before CLK↑	High-level data	20			20			ns
		Low-level data	20			20			
t_h	Hold time-data after CLK↑		5			5			ns
T_A	Operating free-air temperature		– 55		125	0		70	°C

electrical characteristics over recommended operating free-air temperature range (unless otherwise noted)

PARAMETER		TEST CONDITIONS†			SN54LS74A			SN74LS74A			UNIT
					MIN	TYP‡	MAX	MIN	TYP‡	MAX	
V_{IK}		V_{CC} = MIN,	I_I = – 18 mA				– 1.5			– 1.5	V
V_{OH}		V_{CC} = MIN, I_{OH} = – 0.4 mA	V_{IH} = 2 V,	V_{IL} = MAX,	2.5	3.4		2.7	3.4		V
V_{OL}		V_{CC} = MIN, I_{OL} = 4 mA	V_{IL} = MAX,	V_{IH} = 2 V,		0.25	0.4		0.25	0.4	V
		V_{CC} = MIN, I_{OL} = 8 mA	V_{IL} = MAX,	V_{IH} = 2 V,					0.35	0.5	
I_I	D or CLK	V_{CC} = MAX,	V_I = 7 V				0.1			0.1	mA
	$\overline{CLR}$ or $\overline{PRE}$						0.2			0.2	
I_{IH}	D or CLK	V_{CC} = MAX,	V_I = 2.7 V				20			20	μA
	$\overline{CLR}$ or $\overline{PRE}$						40			40	
I_{IL}	D or CLK	V_{CC} = MAX,	V_I = 0.4 V				– 0.4			– 0.4	mA
	$\overline{CLR}$ or $\overline{PRE}$						– 0.8			– 0.8	
I_{OS}§		V_{CC} = MAX,	See Note 4		– 20		– 100	– 20		– 100	mA
I_{CC} (Total)		V_{CC} = MAX,	See Note 2			4	8		4	8	mA

† For conditions shown as MIN or MAX, use the appropriate value specified under recommended operating conditions.
‡ All typical values are at V_{CC} = 5 V, T_A = 25°C.
§ Not more than one output should be shorted at a time, and the duration of the short circuit should not exceed one second.
NOTE 2: With all outputs open, I_{CC} is measured with the Q and $\overline{Q}$ outputs high in turn. At the time of measurement, the clock input is grounded.
NOTE 4: For certain devices where state commutation can be caused by shorting an output to ground, an equivalent test may be performed with V_O = 2.25 V and 2.125 V for the 54 family and the 74 family, respectively, with the minimum and maximum limits reduced to one half of their stated values.

switching characteristics, V_{CC} = 5 V, T_A = 25°C (see note 3)

PARAMETER	FROM (INPUT)	TO (OUTPUT)	TEST CONDITIONS		MIN	TYP	MAX	UNIT
f_{max}			R_L = 2 kΩ,	C_L = 15 pF	25	33		MHz
t_{PLH}	$\overline{CLR}$, $\overline{PRE}$ or CLK	Q or $\overline{Q}$				13	25	ns
t_{PHL}						25	40	ns

Note 3: Load circuits and voltage waveforms are shown in Section 1.

recommended operating conditions

			SN54S74			SN74S74			UNIT
			MIN	NOM	MAX	MIN	NOM	MAX	
V_{CC}	Supply voltage		4.5	5	5.5	4.75	5	5.25	V
V_{IH}	High-level input voltage		2			2			V
V_{IL}	Low-level input voltage				0.8			0.8	V
I_{OH}	High-level output current				– 1			– 1	mA
I_{OL}	Low-level output current				20			20	mA
t_w	Pulse duration	CLK high	6			6			ns
		CLK low	7.3			7.3			
		$\overline{CLR}$ or $\overline{PRE}$ low	7			7			
t_{su}	Setup time, before CLK ↑	High-level data	3			3			ns
		Low-level data	3			3			
t_h	Input hold time - data after CLK ↑		2			2			ns
T_A	Operating free-air temperature		– 55		125	0		70	°C

electrical characteristics over recommended operating free-air temperature range (unless otherwise noted)

PARAMETER		TEST CONDITIONS†		SN54S74			SN74S74			UNIT
				MIN	TYP‡	MAX	MIN	TYP‡	MAX	
V_{IK}		V_{CC} = MIN,	I_I = – 18 mA,			– 1.2			– 1.2	V
V_{OH}		V_{CC} = MIN, I_{OH} = – 1 mA	V_{IH} = 2 V, V_{IL} = 0.8 V,	2.5	3.4		2.7	3.4		V
V_{OL}		V_{CC} = MIN, I_{OL} = 20 mA	V_{IH} = 2 V, V_{IL} = 0.8 V,			0.5			0.5	V
I_I		V_{CC} = MAX,	V_I = 5.5 V			1			1	mA
I_{IH}	D	V_{CC} = MAX,	V_I = 2.7 V			50			50	μA
	$\overline{CLR}$					150			150	
	$\overline{PRE}$ or CLK					100			100	
I_{IL}	D	V_{CC} = MAX,	V_I = 0.5 V			– 2			– 2	mA
	$\overline{CLR}$¶					– 6			– 6	
	$\overline{PRE}$¶					– 4			– 4	
	CLK					– 4			– 4	
I_{OS}§		V_{CC} = MAX		– 40		– 100	– 40		– 100	mA
I_{CC}#		V_{CC} = MAX,	See Note 2		15	25		15	25	mA

†For conditions shown as MIN or MAX, use the appropriate value specified under recommended operating conditions.
‡All typical values are at V_{CC} = 5 V, T_A = 25°C.
§Not more than one output should be shorted at a time, and the duration of the short circuit should not exceed one second.
¶Clear is tested with preset high and preset is tested with clear high.
#Average per flip-flop.
NOTE 2: With all outputs open, I_{CC} is measured with the Q and $\overline{Q}$ outputs high in turn. At the time of measurement, the clock input is grounded.

switching characteristics, V_{CC} = 5 V, T_A = 25°C (see note 3)

PARAMETER	FROM (INPUT)	TO (OUTPUT)	TEST CONDITIONS	MIN	TYP	MAX	UNIT
f_{max}			R_L = 280 Ω, C_L = 15 pF	75	110		MHz
t_{PLH}	$\overline{PRE}$ or $\overline{CLR}$	Q or $\overline{Q}$			4	6	ns
t_{PHL}	$\overline{PRE}$ or $\overline{CLR}$ (CLK high)	$\overline{Q}$ or Q			9	13.5	ns
	$\overline{PRE}$ or $\overline{CLR}$ (CLK low)				5	8	
t_{PLH}	CLK	Q or $\overline{Q}$			6	9	ns
t_{PHL}					6	9	ns

NOTE 3: Load circuits and voltage waveforms are shown in Section 1.

IMPORTANT NOTICE

Texas Instruments and its subsidiaries (TI) reserve the right to make changes to their products or to discontinue any product or service without notice, and advise customers to obtain the latest version of relevant information to verify, before placing orders, that information being relied on is current and complete. All products are sold subject to the terms and conditions of sale supplied at the time of order acknowledgement, including those pertaining to warranty, patent infringement, and limitation of liability.

TI warrants performance of its semiconductor products to the specifications applicable at the time of sale in accordance with TI's standard warranty. Testing and other quality control techniques are utilized to the extent TI deems necessary to support this warranty. Specific testing of all parameters of each device is not necessarily performed, except those mandated by government requirements.

CERTAIN APPLICATIONS USING SEMICONDUCTOR PRODUCTS MAY INVOLVE POTENTIAL RISKS OF DEATH, PERSONAL INJURY, OR SEVERE PROPERTY OR ENVIRONMENTAL DAMAGE ("CRITICAL APPLICATIONS"). TI SEMICONDUCTOR PRODUCTS ARE NOT DESIGNED, AUTHORIZED, OR WARRANTED TO BE SUITABLE FOR USE IN LIFE-SUPPORT DEVICES OR SYSTEMS OR OTHER CRITICAL APPLICATIONS. INCLUSION OF TI PRODUCTS IN SUCH APPLICATIONS IS UNDERSTOOD TO BE FULLY AT THE CUSTOMER'S RISK.

In order to minimize risks associated with the customer's applications, adequate design and operating safeguards must be provided by the customer to minimize inherent or procedural hazards.

TI assumes no liability for applications assistance or customer product design. TI does not warrant or represent that any license, either express or implied, is granted under any patent right, copyright, mask work right, or other intellectual property right of TI covering or relating to any combination, machine, or process in which such semiconductor products or services might be or are used. TI's publication of information regarding any third party's products or services does not constitute TI's approval, warranty or endorsement thereof.

Copyright © 1999, Texas Instruments Incorporated